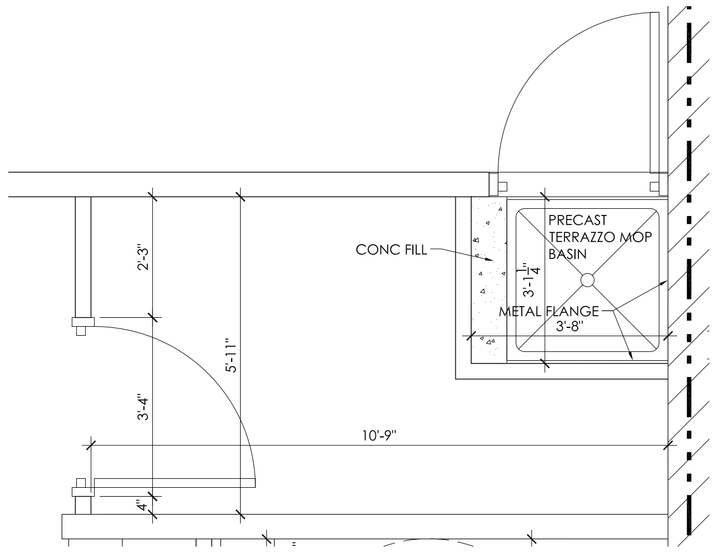

5 ENLARGED PLAN
1/2"=1'-0"

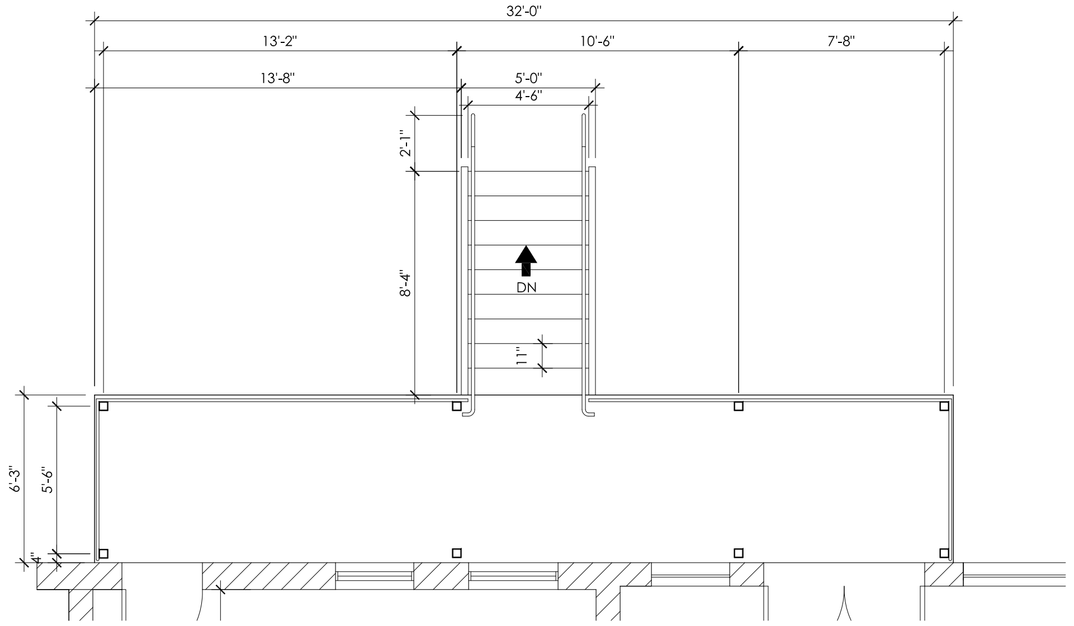

4 METAL DECK PLAN
1/4"=1'-0"

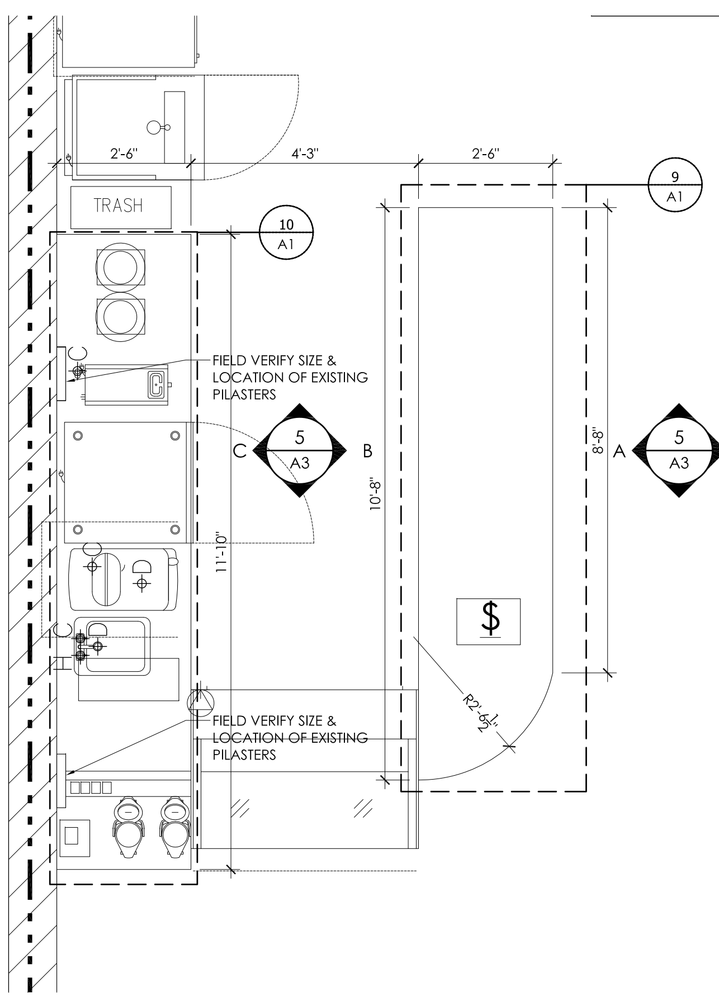

8 ENLARGED SERVICE STATION PLAN
1/2"=1'-0"

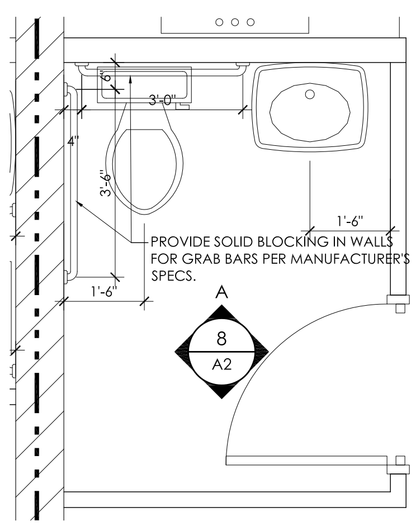

7 ENLARGED BATHROOM PLAN
1/2"=1'-0"

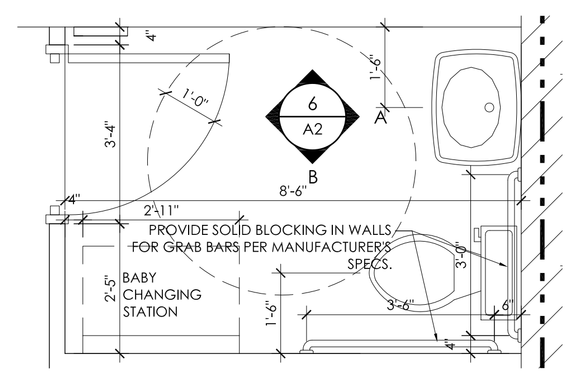

6 ENLARGED BATHROOM PLAN
1/2"=1'-0"

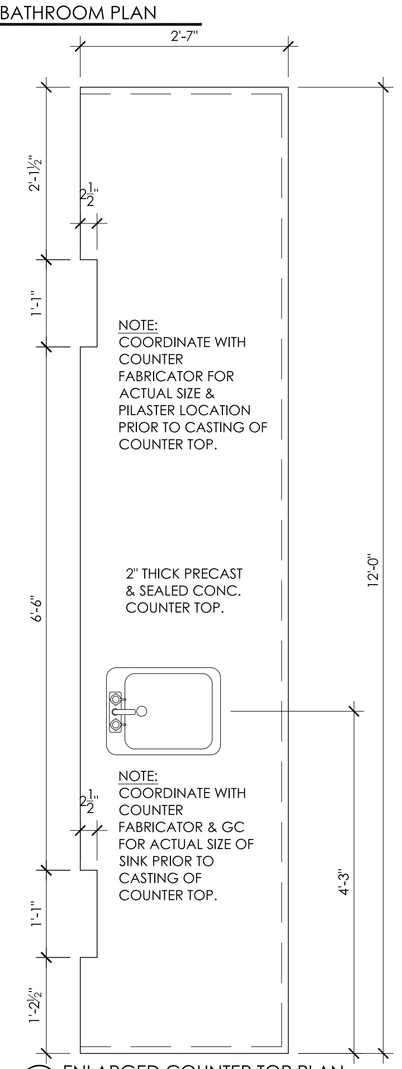

10 ENLARGED COUNTER TOP PLAN
3/4"=1'-0"

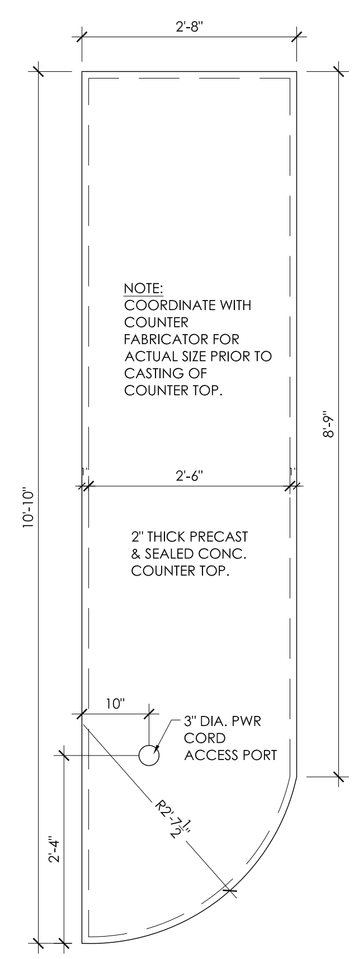

9 ENLARGED COUNTER TOP PLAN
3/4"=1'-0"

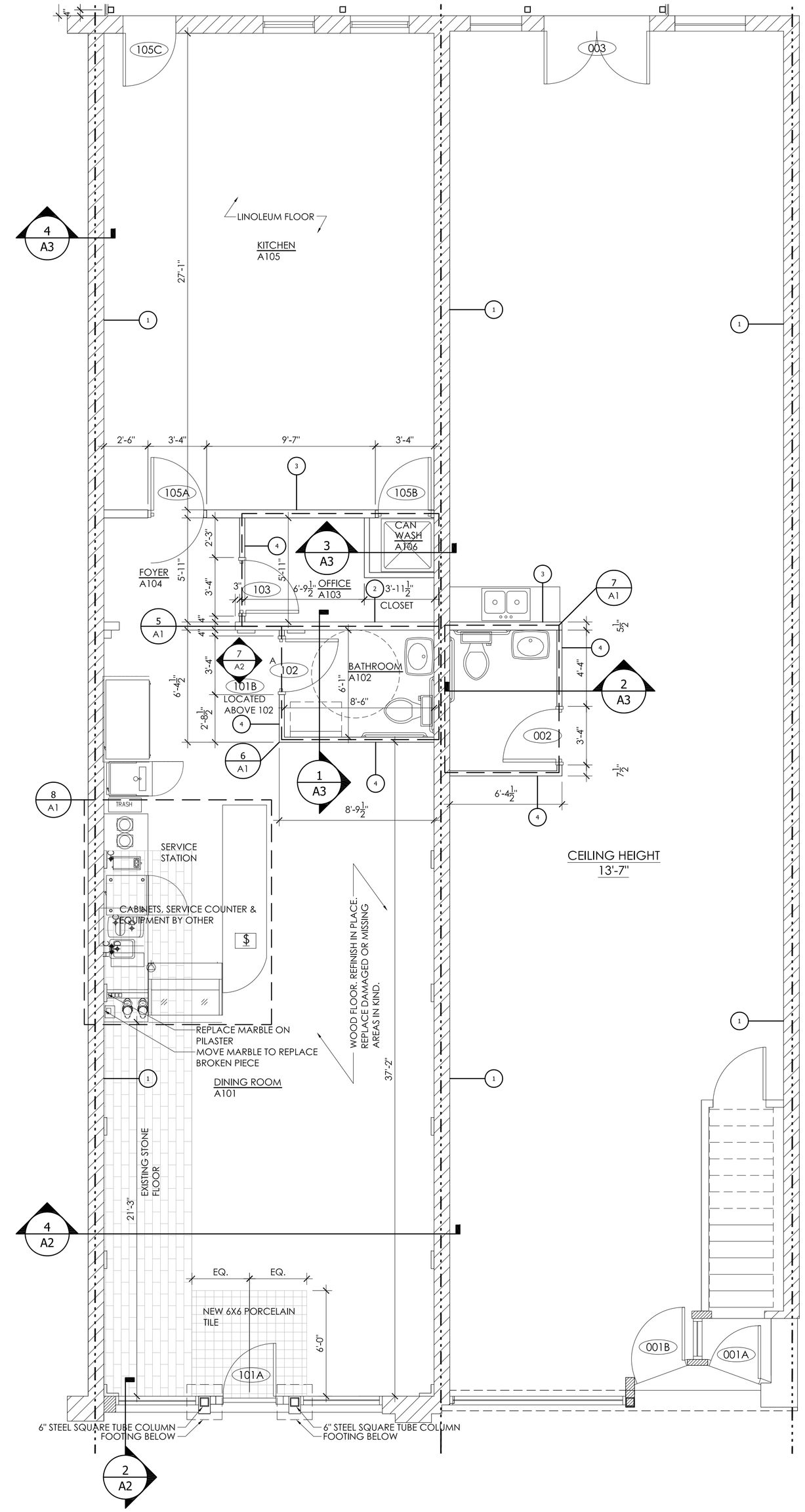

3 1ST FLOOR PLAN
1/4"=1'-0"

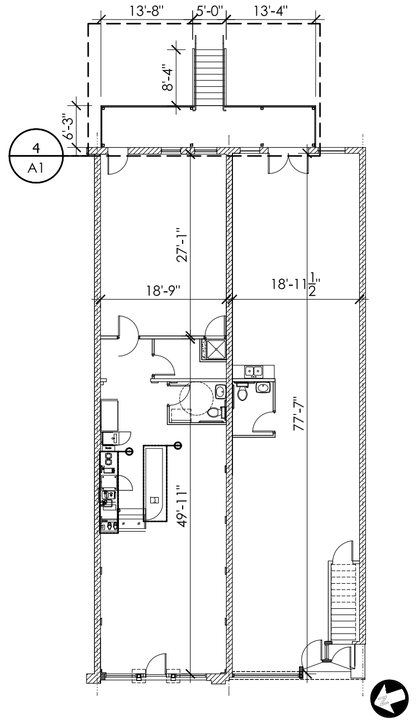

1 1ST FLOOR KEY PLAN
1/16"=1'-0"

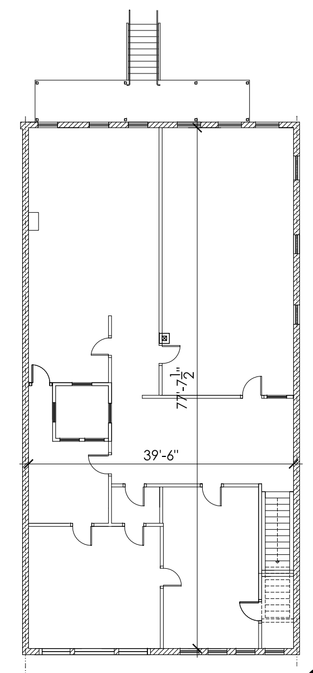

2 2ND FLOOR KEY PLAN
1/16"=1'-0"

WALL LEGEND

1. EXIST SOLID MASONRY WALL. 9" MIN. THICKNESS 3HR FIRE RATING
2. EXIST STUD WALL W/ PLASTER FINISH
3. 2X6 WD STUD 16" O.C. W/ 5/8" GWB FINISH
4. 2X4 WD STUD 16" O.C. W/ 5/8" GWB FINISH

TRAUB ARCHITECTURE + DESIGN, INC.
328A West Morgan Street
Raleigh, NC 27601
919.829.1291
919.829.1292 Fax

GERALD P. TRAUB REGISTERED ARCHITECT A 3488 NORTH CAROLINA RALEIGH, N.C.

PROJECT # 2008-09

GENERAL NOTES:

COPYRIGHT © 2004 TRAUB ARCHITECTURE + DESIGN, INC. ALL RIGHTS RESERVED.
THIS PRODUCT IS THE PROPERTY OF TRAUB ARCHITECTURE + DESIGN, INC. IT MAY NOT BE REPRODUCED WITHOUT EXPRESS WRITTEN PERMISSION OF THE ARCHITECT. USE OF PLANS FOR CONSTRUCTION OF DUPLICATE BUILDINGS MUST BE LICENSED BY THE ARCHITECT.
PLANS NOT VALID FOR CONSTRUCTION WITHOUT APPROPRIATE PROFESSIONAL SEALS.
NOT RESPONSIBLE FOR CONSTRUCTED VARIATIONS FROM THE INFORMATION DEPICTED.

Warrenton Pie Shop
108&110 S. Main Street
WARRENTON, NC

REVISIONS

DATE
12/10/09

DRAWN BY
DOC

PROJECT NO.
2008-09

SHEET TITLE
PLANS

SHEET
A1

TRAUB ARCHITECTURE + DESIGN, INC.