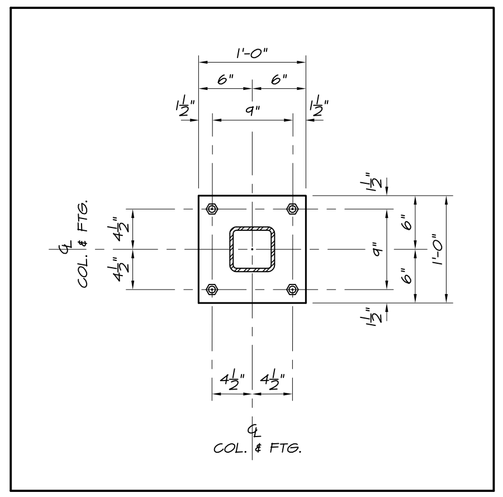

01 FOOTING AND COLUMN BASE PLAN

NOT TO SCALE

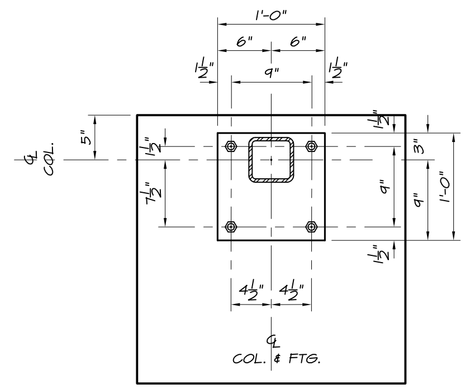

02 FOOTING AND COLUMN BASE PLAN

NOT TO SCALE

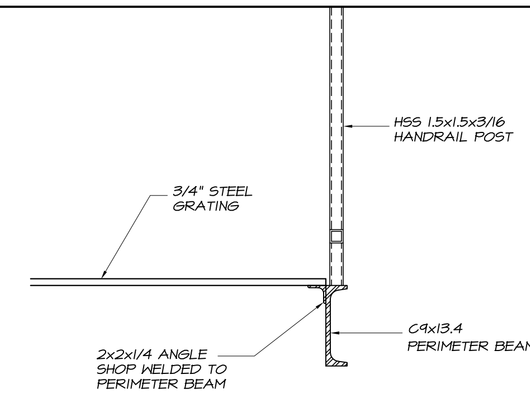

03 DETAIL THROUGH SIDE PERIMETER BEAM

NOT TO SCALE

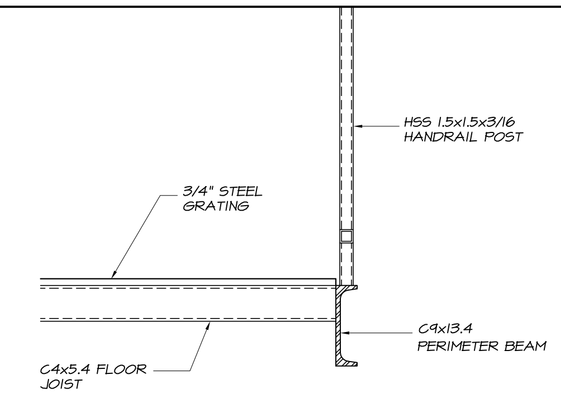

04 DETAIL THROUGH REAR PERIMETER BEAM

NOT TO SCALE

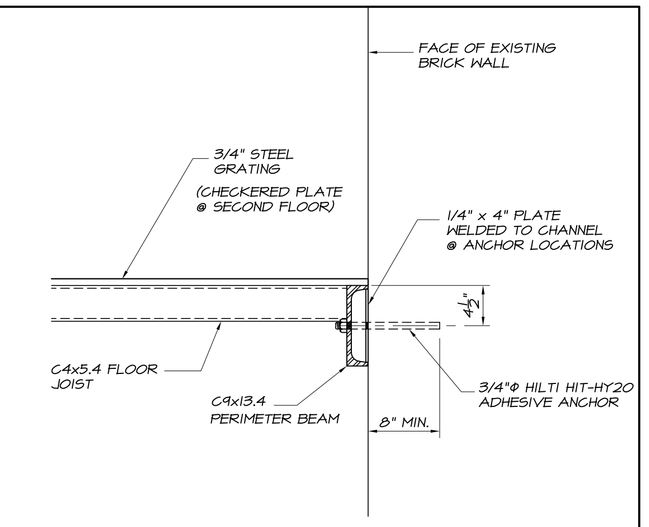

05 DETAIL THROUGH REAR LEDGER TO EXISTING BLDG.

NOT TO SCALE

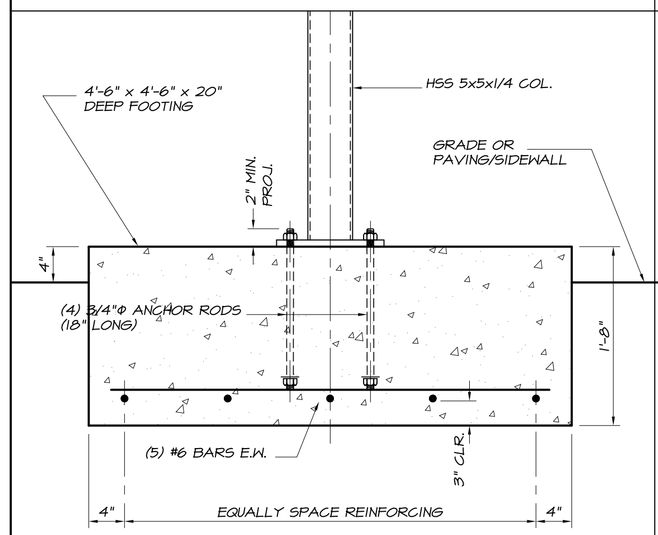

06 COLUMN FOOTING DETAIL

NOT TO SCALE

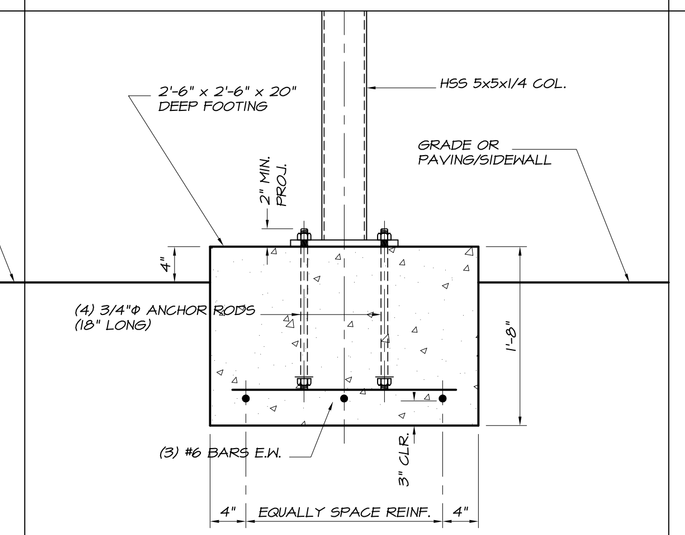

07 COLUMN FOOTING DETAIL

NOT TO SCALE

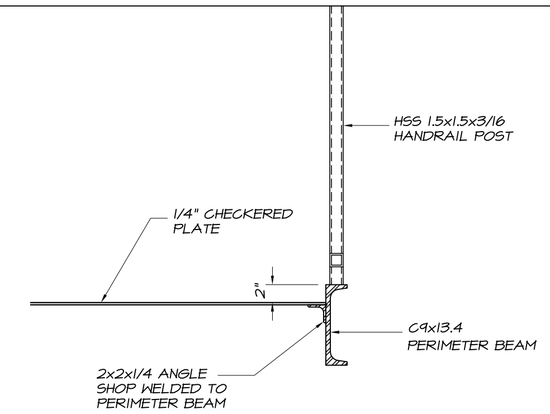

08 DETAIL THROUGH SIDE PERIMETER BEAM

NOT TO SCALE

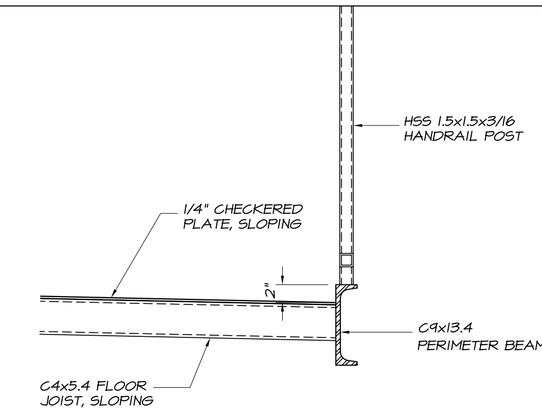

09 DETAIL THROUGH REAR PERIMETER BEAM

NOT TO SCALE

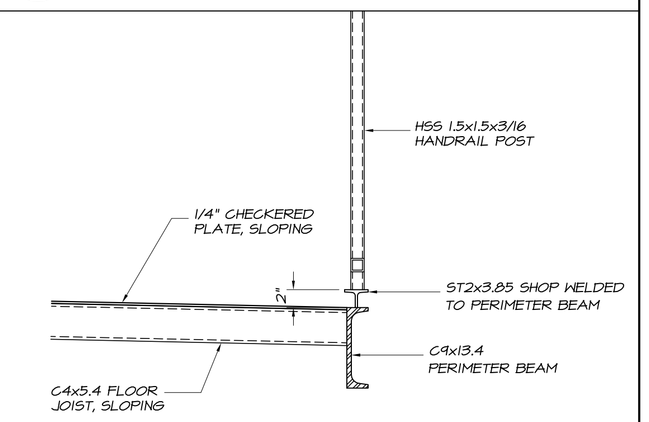

10 DETAIL THROUGH REAR PERIMETER BEAM

NOT TO SCALE

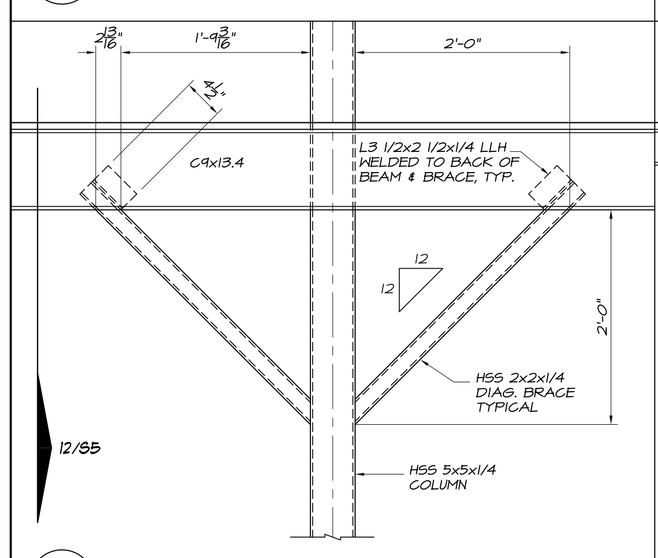

11 DIAGONAL BRACE DETAIL

NOT TO SCALE

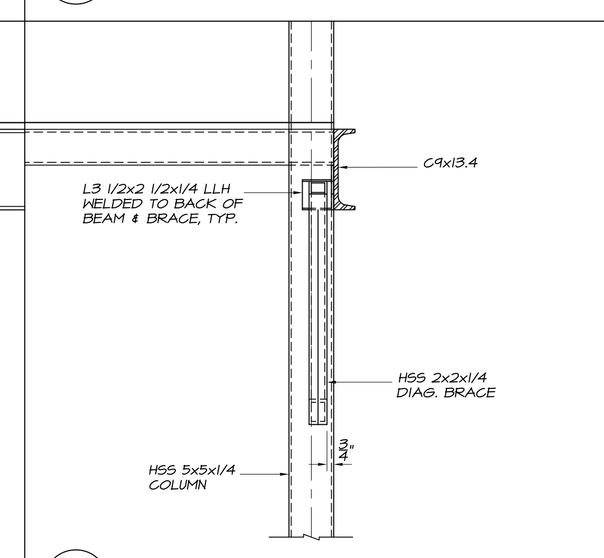

12 DIAGONAL BRACE DETAIL

NOT TO SCALE

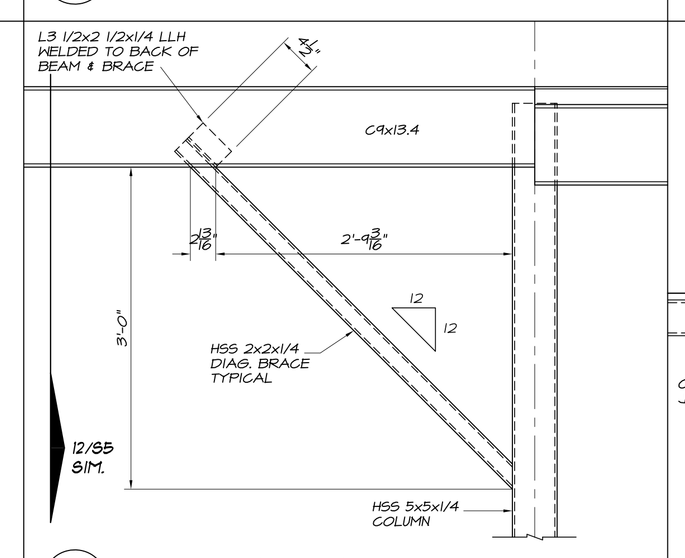

13 DIAGONAL BRACE DETAIL

NOT TO SCALE

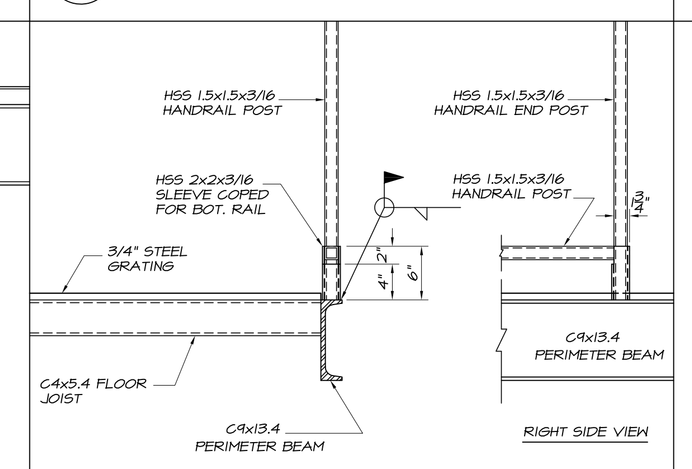

14 DETAIL AT END REMOVABLE RAIL

(PICKETS OMITTED)

NOT TO SCALE

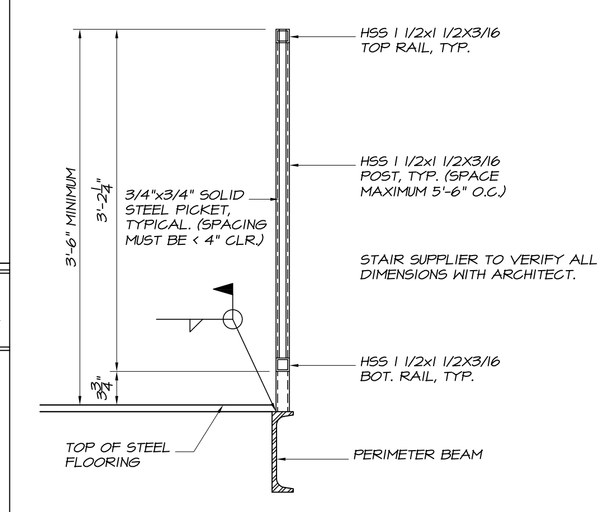

15 SECTION THROUGH HANDRAIL

NOT TO SCALE

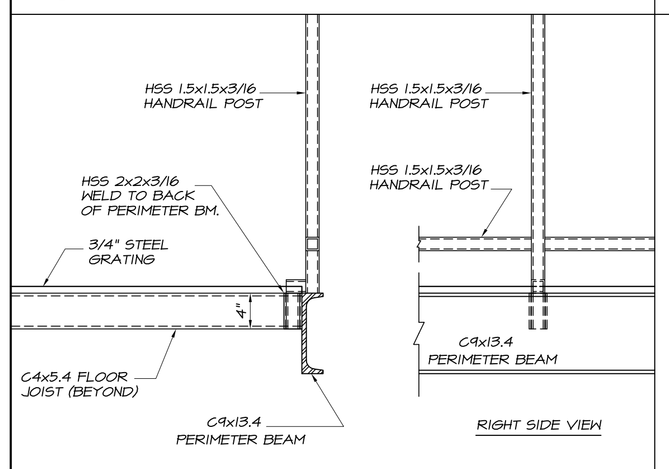

16 DETAIL AT CENTER REMOVABLE RAIL

(PICKETS OMITTED)

NOT TO SCALE

FIRM LICENSE #: C-0621

NORTH CAROLINA PROFESSIONAL SEAL 7908 ENGINEER JOHN W. HAYES

1/27/10

LYSAGHT & ASSOCIATES, P.A.
STRUCTURAL ENGINEERS
120 ST. MARY'S STREET
RALEIGH, NC 27605
919.833-0495

REV#	DESCRIPTION	DATE

WARRENTON PIE SHOP STAIR TOWER

WARRENTON, NC

FILE NAME: 8756 S5.DWG (1" = 1'-0" SCALE)

DATE: 1/27/10
DRAWN: WJB
CHECKED: JWH
APPROVED: JWH

SHEET
S5
OF 6 SHEETS

LA-8756